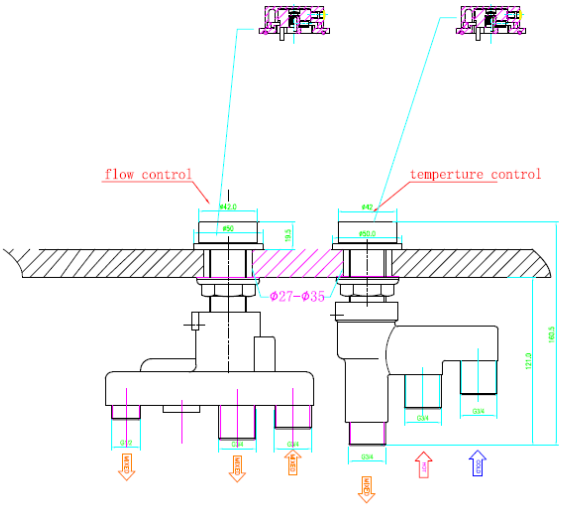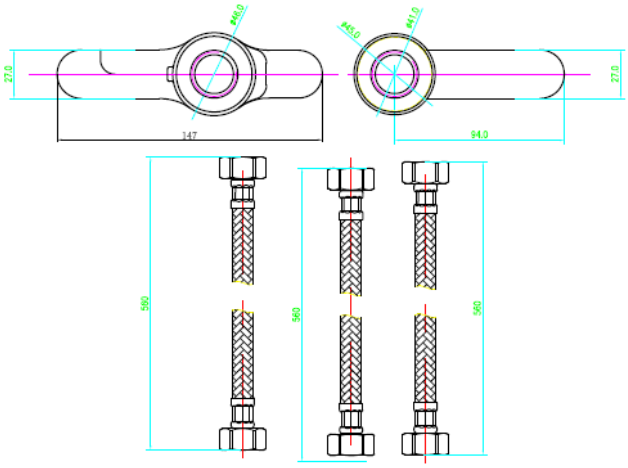Deck mounted Bath & Shower valve dual function